Medium Series Technical Specifications

Screwed Unit

Flanged Unit

Function;

A scaled dial and mechanical indicator continuously monitor the flow rate at any given time whilst electrical switches can be specified to signal when a particular level has been reached during increasing or decreasing flow rates.

Minimum Scale	(3/4" to 2½")	0-40 LPM
Maximum Scale	(3/4" to 1½")	0-400 LPM
	(1½" to 2")	0-500 LPM
	(2½")	0-800 LPM

Style;

Through its unique modular design it allows for easy field installation and service. It does not require any straight pipe runs before or after the monitor thus minimizing the installation footprint. The versatile design of the vane monitor allows for orientation to be mounted in any position. Vane style monitor operates when flow is introduced through the inlet connection making direct contact with the vane that is mechanically linked to the indicator shaft. The fluid forces the vane to move through a contoured opening creating a variable orifice, the greater the flow the larger the orifice becomes for flow to pass. The vane style monitor is spring loaded and allows the vane to return on decreasing flows.

Switches;

Are field adjustable, suitable for batching, trending, totalising or recording where required. All Flow-Mon units can be supplied with a 0-10v or 4-20mA output.

Sizes;

All sizes are manufactured to the same simple design concept, the main characteristic of which ensures that the pressure drops are confined to an absolute minimum (see "pressure drop" charts) across the vane orifice at full flow, with viscosities as high as 600cS. Sizes are defined by pipe size and/or maximum flow capacity, and every flow switch is individually calibrated so that full scale deflection is used in each application i.e. the maximum scale reading coincides with the maximum requirements of system as specified by the customer. Calibration may be in any units with Single or Dual scale to specification.

Applications;

Water
De-Ionised Water
Soluble Oils (Glycols)
Petroleum Based Fluids
Synthetic Based Fluids
Coolants
Corrosive Fluids
Paints
Solvents
Air & Gases

Comparison;

Comparable to similar style devices in the industry, "flow through" design offers a low pressure loss. To ensure accuracy they are individually calibrated in any unit of measure to customer operating specifications.

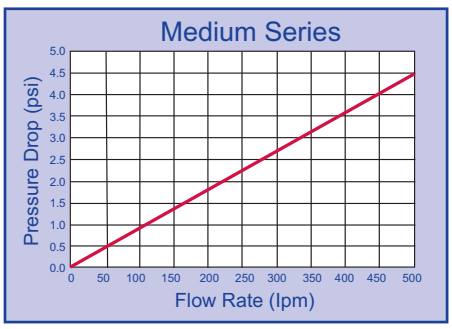

DIMENSIONS

Standard Enclosure Box

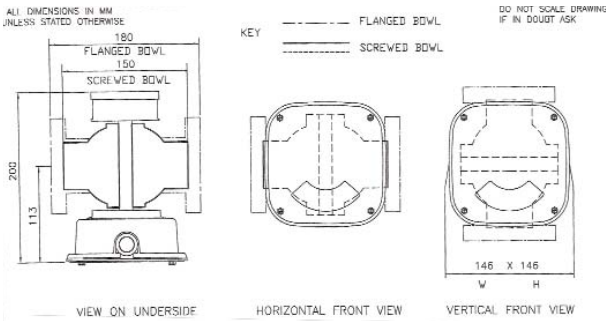

Aluminium Enclosure Box

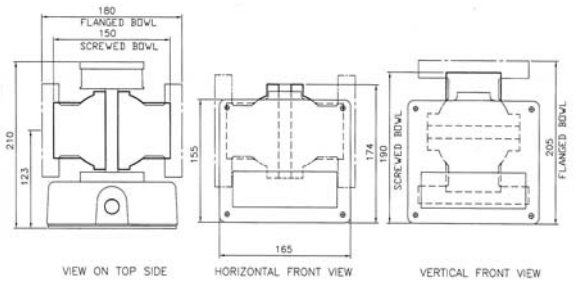

Explosion Proof Enclosure Box

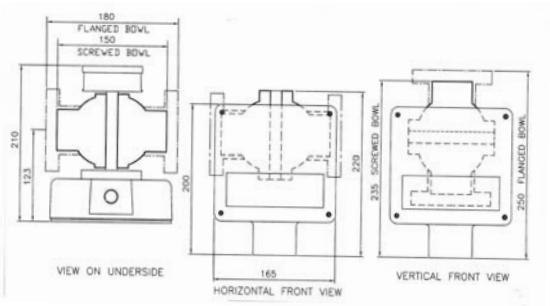

SERIES AND FLOW RATE

FMC* = Low Flow
FML* = Litres / Min
FMB* = Imp. Gallons / Min
FMG* = U.S. Gallons / Min
FMM* = M3/ Hour
*Add Full Flow Rate in Units

MATERIAL OF MANUFACTURE

AL = Aluminum
B = Bronze
CI = Cast Iron
CIK = Cast Iron Nickel Plated
S = Carbon Steel
SS = Stainless Steel
PTFE* = PTFE
PVC* = PVC

*Only available up to 4" Port Connections and 100 psi / 7 bar maximum pressure.
Note: For materials and pressures not specified, please consult factory.

PRESSURE RATING

LP = 300 psi / 20 bar maximum
MP = 750 psi / 50 bar maximum
HP = 3000 psi / 200 bar maximum*
*CI, CIK, S & SS only

INDICATOR READ OUT

ME = Mechanical Pointer only
3EE = SPDT 3 Wire Switch
4EE = SPDT Double-break 4 wire switch
6EE = DPDT 6 Wire switch
3EEG = SPDT 3 Wire Switch with Gold Contacts
3EE(ATEX3) = SPDT Explosion Proof Micro Switch to ATEX zone 3
3EE(ATEX2) = SPDT Explosion Proof Switch to ATEX zone 2
6EE(ATEX2) = DPDT Explosion Proof Switch to ATEX zone 2
AIR = Pneumatic Switch
POT = Potentiometer (Specify Rating)
OUT = 4-20 mAmp Output
TOT = Digital Rate Totaliser
TOTX = Digital Rate Totaliser (ATEX)

Note 1: All electrical boxes (apart from TOT & TOTX) also carry a Mechanical Pointer
Note 2: For 4 & 6 Wire Switches replace 3EE by 4EE or 6EE
Note 3: Manufactured to IP65 (NEMA 4) as standard (up to 2 1/2")

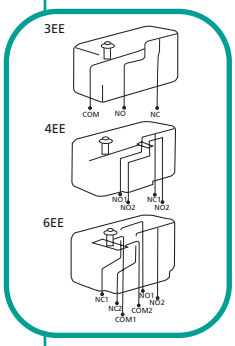

ELECTRICAL OPTIONS

CODE: 3EE
Basic single pole, double throw, 3 wire switch.
15 Amp - 125, 250 or 480V.AC
0.5 Amp - 125V.DC / 0.25 Amp - 250V.DC

CODE: 4EE
Contact arrangements is single-pole, double throw, double-break.
10 Amp - 125 or 250V.AC
0.3 Amp - 125V.DC / 0.15 Amp - 250V.DC

CODE: 6EE
Double-pole, double throw switches simultaneously make and break two independent circuits.
10 Amp - 125 or 250V.AC
0.3 Amp - 125V.DC / 0.15 Amp - 250V.DC

CODE: AIR
This system offers an alternative safety arrangement for operation in explosive atmospheres. Compressed air can be used to transmit an on / off signal from the danger area, or to operate a klaxon inside the danger area.

CODE: POT
Remote read-out option (0-10V). Rating to customer's specification, e.g. 1K, 2K etc.

CODE: OUT
A transducer can be connected to the potentiometer to give the required 4-20 mAmp readout. Data Loggers or Recorders can be added to the system.

The 3 and 6 wire switches described above are available in ATEX approved explosion proof versions, with the appropriate enclosure box. When two or more switches are assembled in one unit, they remain independently adjustable. Re-adjustments may be carried out in the field.

FLOW DIRECTIONS

D1 = → D2 = ←
D3 = ↑ D4 = ↓

'O' RING SEAL MATERIAL

S1 =	Buna	(-40°C	+110°C)
S2 =	EPDM	(-40°C	+150°C)
S3 =	Viton	(-20°C	+200°C)
S4 =	PTFE	(-100°C	+250°C)
S5 =	Perlast	(-15°C	+330°C)

PORT CONNECTIONS

2 = 1/4 "
4 = 1/2"
6 = 3/4"
8 = 1"
10 = 1 1/4"
12 = 1 1/2"
16 = 2"

Sizes 1/4" - 2" are Screwed or Flanged.
For Flanged Bodies, add relevant code letters (shown below).

20 = 2 1/2"
24 = 3"
32 = 4"
48 = 6"
64 = 8"

Sizes 2 1/2" - 8". Standard units have Flanged Bodies - add relevant code letters (shown below).
Cast Iron and Steel mating flanges are available:
For Screwed, add - S
For Socket Weld, add - SW

Standard Threads are BSP, for NPT add - N

For Flanged Connections add one of the following codes:

F10
F16
F25
F40

Alternative Pressure Ratings in BS4504 / DIN2632-5

F150
F300
F600

Alternative Pressure Ratings in BS1560 / ANSI B16.5

FAD
FE
FF

Alternative Pressure Ratings in BS10

For special flange connections, please enquire at factory

VISCOSITY AT OPERATING TEMPEATURE

State units and scale
eg. Water is 1 Centistoke (cS)
Maximum rating should not exceed 600cS

Air & Gas Applications

Flow switches can be used to measure gas flows in exactly the same way as liquid flows. When enquiring for sucl an application the following information will be required:

Specific gravity of the gas
Maximum flow volume
Operating temperature
Operating pressure

Medium Series Installation and Maintenance Instructions

Installation Instructions;

• The flow indicators are in-line devices. To install, connect your piping into the flanged ports, with the flow going into the port marked "IN". Mounting can be in any position, and no straight length of pipe is required before or after the unit.

• Under the Pressure Equipment Directive (PED) these products are Pressure Accessories, and are not approved for use as safety Accessories, as defined by the PED. If used for safety purposes, it is the responsibility of the user/installer to assess the suitability of the product in the pressure equipment or system in which it is used.

It is the responsibility of the user/installer of this equipment to ensure;-

1. The product is installed and used by suitably trained personnel in accordance with all relevant Local and National regulations and codes.
2. Safe working practices for the media & processes concerned are followed during installation & maintenance.
3. The materials of construction are suitable for the application.
4. The product is protected from fire.
5. The product is protected from impact/vibration.
6. The instrument is only cleaned by washing with detergent, do not use abrasive cleaners or solvents.
7. For outdoor use in exposed positions the instrument must be additionally protected/shielded from heavy rainfall.
8. Regular inspection for corrosion/erosion and wear are carried out.

Essential Safety Requirements;

1. The instrument must be installed in accordance with the instructions provided.
2. Prior to installation ensure pipelines are flushed/drained to ensure they are free from any solid particles or pressure.
3. Care must be taken to avoid introducing torsional stress on the instrument when installing into the pipeline. Tighten sufficiently to avoid leaks & check at regular intervals during maintenance.
4. Ensure pipelines are fully primed before commencing normal use.
5. Valves must be opened or closed gradually to avoid shock/vibration.
6. Do not exceed maximum working pressure as stated on the label.
7. Only use with the fluid/gas stated on the label.
8. Do not exceed minimum/maximum working temperature as stated.
9. Do Not Use instrument if any part of the cable appears to be damaged.
10. Isolate instrument before removing cover.

General Maintenance;

1. Remove instrument from pipeline.
2. Remove flanges/bowls by undoing 4 securing bolts, leaving centre housing only. (keep enclosure box and spring housing intact)
3. Check for and remove any swarf/foreign body in bowls clean if necessary.
4. Remove faceplate and window
5. Check pointer is still firmly secured
6. Push open the valve plate, (depending on flow rate tension may be high), the valve plate will spring back to 0 when released. Repeat a few times at different points along the scale.
7. Listen/watch the switch to make sure it is activated at desired min/max flow as the valve plate is pushed open. (Adjust cam if necessary)
8. DO NOT remove or adjust springs as this will affect the calibration of the instrument.
9. Re-assemble instrument, ensure "O" rings are properly located in grooves and have been undamaged.

Switch Setting;

The cam which operates the microswitch is situated on the spindle behind the pointer and can be adjusted to give an alarm anywhere between zero and max, flow. To alter the setting, lift the cam and rotate the cam in the direction required until switch point is located, then gently lower cam in that position.

Enclosure box rotation instructions-change of flow direction

Tools required:
Screw driver
Allen wrench set
5/16 nut driver

1.) Remove 4 screws from nameplate. -5/16 Nut Driver
2.) Remove Name Plate and Window
3.) Remove Calibrated Scale.
4.) Remove Electrical Switch -Screw Driver (if monitor does not have switch(es) go to #5.)
5.) Remove all 4 Allen Screws (5/32 or 4mm Allen Wrench) at base of enclosure and rotate enclosure box to the desired position
6.) Place 4 Allen Screws back into required tapped and tighten control box to meter body.
7.) Loosen Indicator Pointer
NOTE: if monitor does not have switch(es) skip to #11)

8.) "Slightly" Loosen Cam Set Screw just enough to move cam on dial. (DO NOT LOOSEN DIAL SET SCREW LOCATED BELOW THE CAM). This will make easier to tighten once switch contact point is set.) -1/8 (3.175mm)Allen Wrench
9.) Place Switch back into enclosure box and tighten until snug -DO NOT OVER TIGHTEN
NOTE: Switch should be wired prior to re-installation

10.) Rotate Cam to desired Set Point and tighten Allen Screw until snug. Cam will press against switch roller arm to actuate switch.
11.) Place Calibrate Scale and tighten back in position. - DO NOT OVER TIGHTEN
12.) Move Pointer to zero position on calibrated scale and tighten
13.) Place Window then nameplate back on enclosure box and tighten Allen Screws.

Estimated time to rotate control box: 10 to 15 minutes.

Troubleshooting;

1. In the event of a pointer appearing to stick in one position, remove centre housing and clean away pipe scale to ensure that valve plate is free to return to its seating position. (A spacer can be provided so that the flow can pass through whilst maintenance is being carried out)
2. If the pointer 'trembles' allow flow to continue. 'Trembling' is usually air entrapment, and this will be eliminated when the system becomes full.
3. At regular intervals the control valve to the circuit should be closed for one second and then opened to ensure that no large foreign body is holding the vane in one position. The indicator should drop to zero when closing the valve, and then when the valve is opened again return to the running flow point. When carrying out the procedure in 3. the indicator will immediately return to a position a little less than the running flow position and slowly return to the correct reading. This is due to the hysteresis of the 'O' rings and spring.

Medium Series Spares Data

When ordering spares, please give reference number followed by quantity required
All orders should be accompanied by a model number and a serial number of the Flow switch!

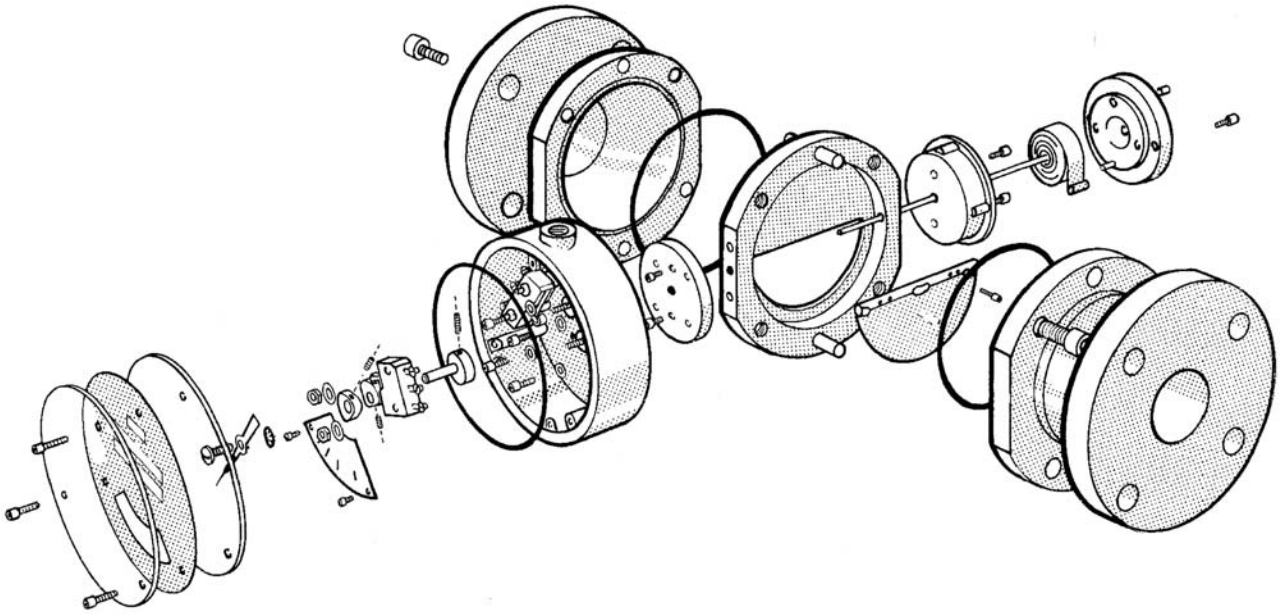

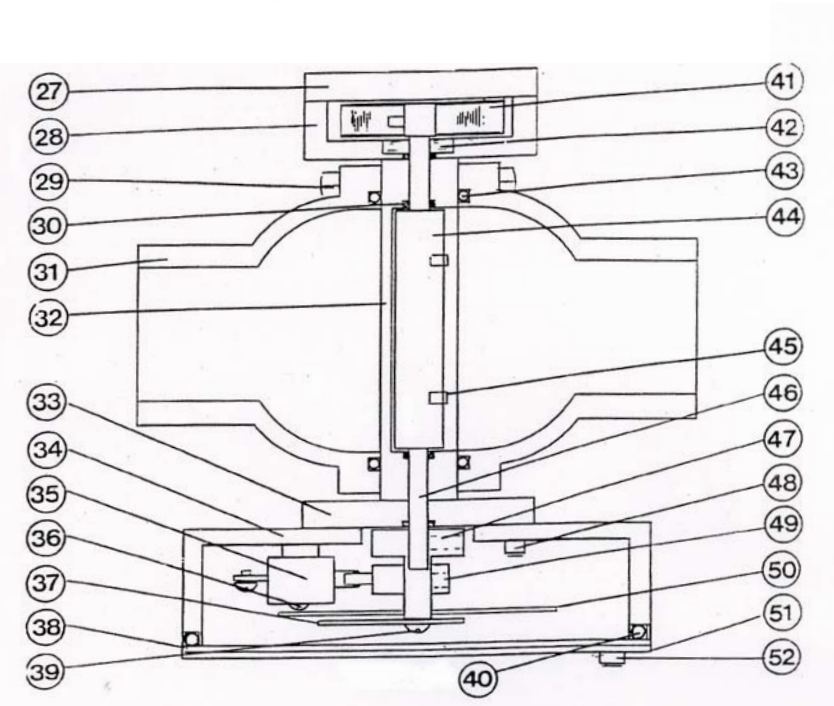

Item	Description
27.	Spring Cover
28.	Spring Housing
29.	Stud & Nuts
30.	O-Ring S1, S2, S3, S4
31.	Bowl Screwed/Flanged AL, B, CI, CIK, S, SS, PVC
32.	Centre Housing AL, B, CI, CIK, S, SS, PVC
33.	Mounting Disc
34.	Enclosure Box
35.	Switch 3EE, 3EEG, 4EE, 6EE, 3EE(ATEX3), 3EE(ATEX2), 6EE(ATEX2), AIR, POT, OUT, DIG, TOT
36.	Screw
37.	Pointer
38.	Window
39.	Screw
40.	(a) Rear O-Ring (b) Front O-Ring
41.	Spring
42.	Bearing
43.	O-Ring S1, S2, S3, S4
44.	Valve Plate
45.	Grub Screw
46.	Spindle
47.	Indicator Dial
48.	Screw
49.	Cam
50.	Dial Plate
51.	Face Plate
52.	Screw

Spares Kit

Item	Qty
30	4-off
35	1-off
36	2-off
38	1-off
40	1-off
43	2-off
52	3-off

Bell Flow Systems
7 Swan Business Centre
Osier Way, Buckingham
Buckinghamshire
MK18 1TB

T: + 44 (0) 1280 817304
F: + 44 (0) 1280 817185
E: mail@bellflowsystems.co.uk

www.bellflowsystems.co.uk