Itron

Knowledge to Shape Your Future

Flostar M

Designed to meet the advanced needs of water utilities in large revenue collection applications

> *Low flow accuracy*
> *Peak flow capacity*
> *Highly engineered materials*

Flostar M is the water meter conceived for drinkable water measurement. It's the best choice for metering of water in residential, commercial and industrial applications.

Wide Measuring Range

Flostar M is a single jet meter available in sizes from DN 40 to 150.
Its metrological performances far exceed ISO/EEC Class C standards.
Its low flow accuracy range combined with significant peak flow capacity ensure complete and efficient measurement whatever the faced flow-rates.

Reliability

Flostar M features a direct magnetic transmission between the turbine and the register without any intermediate gearing in the metered water.
This results in a very robust and reliable design able to withstand most types of potable water environments.
Ease of read in the toughest humid environments (ie: flooded pits) is secured by hermetically sealed IP68 register (copper can/mineral glass envelope).

Simple an effective

Simple but highly engineered materials and design enable a very long durability and the best performances for water metering.

Endurance & Peak Flow Resistance

Performance over time is a key requirement for efficient billing. Flostar M features a patented turbine ball pivoting enhancing endurance at low flow-rates. Hydrodynamic balance and turbine design bring resistance at high and peak flows.

> *Single jet Class C*

> *Hermetically sealed register (coppercan/mineral glass envelope)*

> *Patented ball pivot*

> *Patented turbine levitation*

> *Flostar M DN 150*

> *Flostar M indicator*

> *Cyble RF fitted on Flostar M*

Working Principle

Flostar M is a single jet meter. The water jet is canalized by an injector before hitting the turbine. The single jet tapered injector straightens the flow profile. Its large bore area prevents meter overspeed by clogging.

The high precision processing of the inlet 1 allows Flostar M to meet best accuracy without the need for any bypass or calibration vane adjustment system.
The turbine movement is directly transmitted to the extra dry register through a magnetic coupling 2 without the need for any intermediate gearing in the metered water. This results in a meter with very stable accuracy initially and over time in the widest range of installation configurations and potable water nature.
High quality material for the turbine bearings and patented ball pivot 3 design are securing leakage metering initially and over time regardless of the flow profiles.

The hermetically sealed copper can/mineral glass enveloppe of the IP68 register 4 is safeguarding the read and integrity of the indicator in the toughest environments (flooded pits, mechanical tampering attempts, ...).

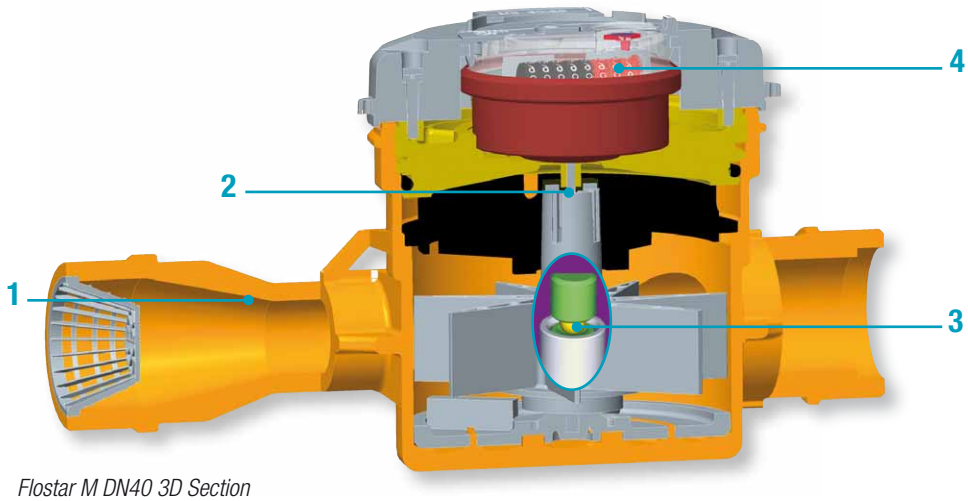

Flostar M DN40 3D Section

Communication : Ready for smart metering

Flostar M is supplied pre-equipped with Cyble Target

Allows communication and remote reading through:

> Pulse output (Cyble Sensor)

> M-Bus protocol (Cyble M-Bus)

> Radio frequency wireless link (Cyble RF)

These Cyble modules allow the Flostar M meter to be connected with various associated systems like our supervision system WaterMind *(see specfic leaflet)*.
They are particularly adapted to commercial and industrial applications where a need for frequent meter monitoring is expressed especially in hard-to-read locations.

Key Advantages of Cyble Technology

> No need for additional investment on the meter to implement remote reading

> Itron standardized meter interface, irrespective of meter technology and widely spread on Itron water meters range

> Reliability brought by electronic switch (no wear or bouncing)

> Reverse flow management

> Principle proven on the field with a 25 years experience

> Pre-equipment being immune to magnetic tampering

Metrological Characteristics

MID / ISO 4064-1:2005 / OIML R49 Approval Values

MID Approval Certificate N°LNE - 7305 and N°LNE - 11437								
Nominal diameter (DN)		**mm**	**40**	**50**	**65**	**80**	**100**	**150**
Minimal flowrate	Q_1	L/h	≥ 100*	≥ 100*	≥ 127*	≥ 157.5*	≥ 250*	≥ 254*
Transition flowrate	Q_2	L/h	≥ 160	≥ 160	≥ 203	≥ 252	≥ 400	≥ 406
Permanent flow rate	Q_3	m^3/h	16	25	40	63	100	160
Overload flowrate	Q_4	m^3/h	20	31.25	50	78.75	125	200
Dynamic	Q_3/Q_1		≤ 160	≤ 250	≤ 315	≤ 400	≤ 400	≤ 630
Standard Ratio	Q_3/Q_1		160	250	315	315	315	315
Q_2/Q_1			1.6					
Accuracy class			2					
Temperature class		°C	T50					T30
Maximum Admissible Pressure		bar	16					20
Orientation			Horizontal					Horizontal
Indicating range		m^3	999999					9999999
Verification scale interval		L	0.5					2
Climatic influence class			+5°C ; +55°C					-

** respectively with dynamics Q_3/Q_1*

Performance Values

Nominal diameter (DN)	mm inches	40 1" 1/2	50 or 65 2" or 2" 1/2	65 or 80 2" 1/2 or 3"	80 or 100 3" or 4"	100 4" or 6"	150 6"
Starting flow*	L/h	22	32	35	50	70	90
Accuracy ± 2% from*	L/h	65	80	120	180	280	300
Accuracy ± 5% from*	L/h	45	60	100	120	170	200
Admissible peak flow (2 hrs. max.)**	m^3/h	40	50	60	90	135	260
Max. temperature for short period	°C	60					
Max. admissible pressure	bar	16		20			
Cyble HF pulse weight	L	10					100

** Average values - ** Without impact on accuracy performances.*

EEC/ISO Approval Values

Nominal diameter (DN)		mm inches	40 1" 1/2	50 or 65 2" or 2" 1/2	65 or 80 2" 1/2 or 3"	80 or 100 3" or 4"	100 4" or 6"	150 6"
EEC/ISO class approval			Class C horizontal position					
Nominal flow rate	Qn	m^3/h	10	15	20	30	50	100
Maximum flow rate	Qmax	m^3/h	20	30	40	60	100	200
Accuracy ± 2% class C	Qt	L/h	150	225	300	450	750	1500
Accuracy ± 5% class C	Qmin	L/h	100	90	120	180	300	600
Testing pressure		bar	25		32			
Max. temperature		°C	30					
Headloss group		bar	1	0.6				1
Min. scale interval		L	0.5					5
Indicating range	DN 40 to 100		999 999.99 m^3					
	DN 150		9999 999.9 m^3					
EEC approval certificate	DN 40 to 100		F06-G1546					
	DN 150		F-06-G-219					

** DN 65, 80 and 100 approved in class B other positions.*

Typical Accuracy Curve, Flostar M Qn 30 m^3/h

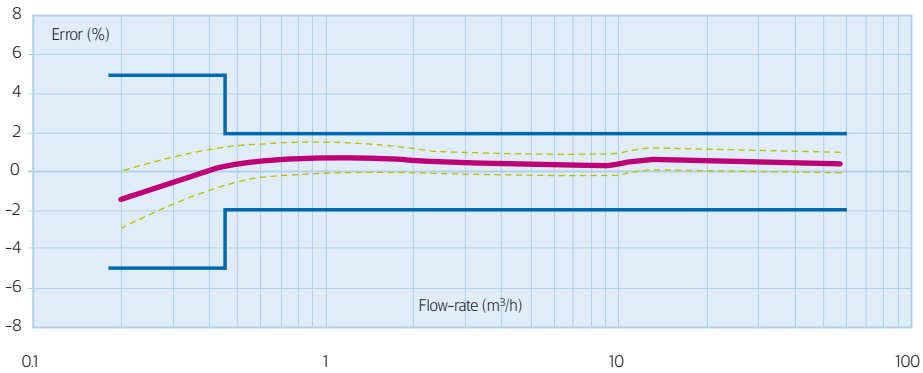

> ***Mobile Flanges***
> *Flostar M from DN65 to DN 150 is equipped with mobile flanges allowing easy installation in a horizontal position.*

Head Loss

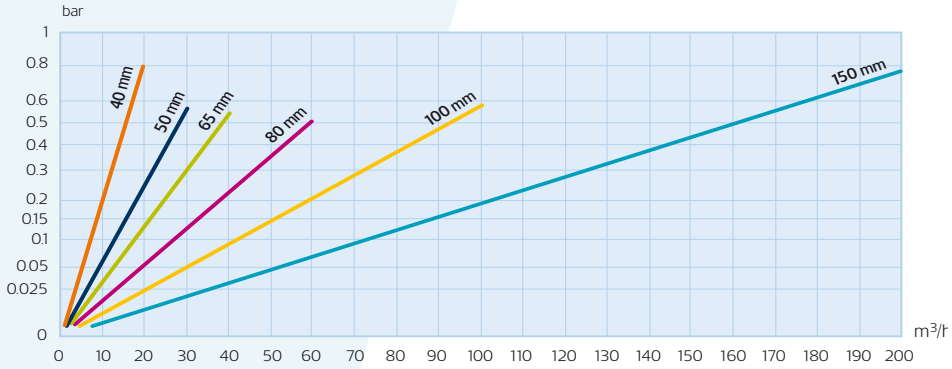

Dimensions

Nominal diameter (DN)		mm	40	50	50	65	80	100	150
Meter connections			G 2" B	G 2" 1/2 B	Flanges ISO PN10/16	Mobile flanges applicable for different standards (ISO / DIN / ANSI / BS)			
A (length)	ISO	mm	300	300	300	300	350	350	450*
	DIN	mm	-	270	270	300	300	360	-
B		mm	175	175	175	180	200	184	240
C		mm	125	125	125	120	150	166	210
D		mm	45	48	83	92	100	110	144
E		mm	133	130	130	129	135	148	173
F		mm	40	40	83	92	100	110	144
G		mm	104	104	104	118	171	198	236
Weight		kg	5.7	6	10	17	21	31.5	62.1

** Additional sleeve DN 150 length 50 mm available.*

Installation requirements

> Flostar M should be installed in the horizontal position with totalizer facing up for optimum performances.

> Installation of a strainer upstream of the meter is recommended to protect the hydraulics against debris that might result from accidents on the network, piping corrosion, ... (see Itron strainer leaflet - Flostar M DN 40 is supplied as standard with a strainer and can be fitted with standard non return valve on request).

> Flostar M is not sensitive to flow disturbers

> *DN 40 and 50 (threaded)*

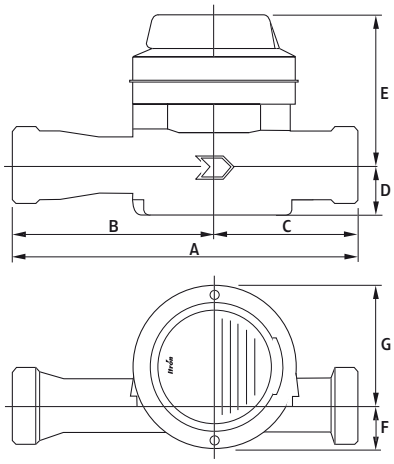

> *DN 50 upto 150 (flanged)*

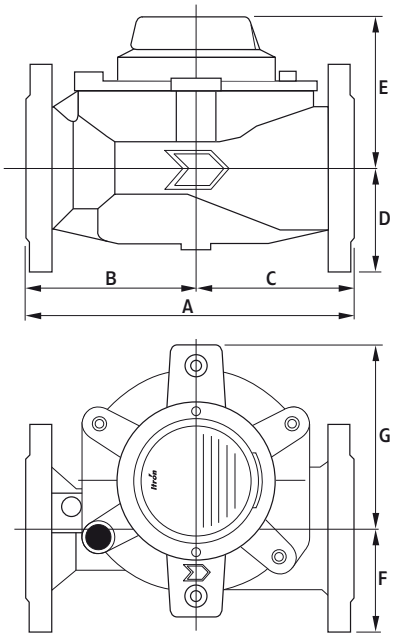

> *Easy sizing of the meter*

Qn 15, 20, 30 and 50 m3/h can be supplied with the upper DN length and flanging for easy downsizing in the field (meter sizing adaptation to real faced flow-rates).

About Itron Inc.

Itron Inc. is a leading technology provider to the global energy and water industries. Our company is the world's leading provider of metering, data collection and utility software solutions, with nearly 8,000 utilities worldwide relying on our technology to optimize the delivery and use of energy and water. Our products include electricity, gas and water meters, data collection and communication systems, including automated meter reading (AMR) and advanced metering infrastructure (AMI); meter data management and related software applications; as well as project management, installation, and consulting services. To know more, start here: www.itron.com

For more information, contact your local sales representative or agency.

11, boulevard Pasteur
67500 Haguenau
France
Phone: +33 3 88 90 63 00
Fax: +33 3 88 73 23 20
www.itron.com

© Copyright 2010, Itron. All Rights Reserved. - Itron reserves the right to change these specifications without prior notice.

WA-0009.1-EN-10.10