TANCY

TBQS Quantometer

Applications

The TBQS Quantometer is a turbine type flow meter mainly used for measuring consumption of natural gas but is also suitable for other non-aggressive gases such as propane, butane, air, CO_2 or inert gases used in various industrial processes.

Key features

- Meter size G10 to G1600
- Flow rates from 2 to 2500 m3 /h
- Nominal sizes from DN 25 (1") to DN 200 (8")
- Pressure class PN 16 and ANSI 150• Measuring range from 1:10 to 1:20
- Meter body made of anodized high strength Aluminum
- Manual lubrication of the ball bearings by means of oil pump
- Maintenance free based on permanent lubrication of the ball bearings as option
- Index head standard made of engineered polymer material, optional made of Aluminum
- Rotating index head (355 °)
- Recommended straight inlet pipe≥3DN and outlet pipe≥2DN
- Horizontal and vertical mounting position
- Approval according to PED (PED 2014/ 68/EU)

Description and operation

The TBQS Quantometer is a turbine gas meter that registers the operating volume using an eight-digit mechanical counter. Via pulses the operating volume can be transferred to an electronic volume corrector and converted to normal or standard conditions.

The Quantometer TBQS is a volume flow meter. The flow of the gas to be measured causes the turbine blade to rotate. The gas flow is narrowed on an annular cross section, is accelerated and directed onto the smooth-running Aluminum rotor. The number of rotations is proportional to the measured gas volume; the frequency of rotations is proportional to the actual gas flow. The rotation of the rotor is connected to a speed reducing gear train and transmitted via a magnetic coupling from the gas pressurized area to the adjustable 8 digit roller counter in the external atmospheric environment

The actual volume flow can be transmitted to electronic volume correctors or data loggers via low frequency (LF-) pulses generated by Reed contacts. In the meter's index head is also located an anti-tampering contact.

The rotation of the rotor can be scanned additionally with one frequency (HF-) sensor as an option. The HF-sensor signal allows the determination of the actual gas flow in high-resolution.

Technical specifications	
Gas temperature:	-25 °C to +60 °C
Ambient temperature:	-25 °C to +60 °C
Storage temperature:	-30 °C to +60 °C
Operating pressure:	16 bar (g)　20bar（g）
Protection class:	IP 67
Materials:	
● Meter housing:	Aluminum alloy
● Turbine rotor:	Aluminum alloy
● Meter index head:	Synthetic material (standard),optional Aluminum
PED-Approval:	HPiVS/P1001-103-Q-06
Reproducibility:	<0.2%
Overload:	Short term up to 1.25 Q_{max}
Pressure change rate:	< 350 mbar/s
Counter:	Eight-digit mechanical roller counter
***Meter** index head:*	Standard synthetic material, aluminum as option
Pulse output:	1 LF-pulser (Reed contact) and 1 anti-tampering contact
	Option: additionally 1 HF-pulser
Connections:	
● Pressure:	1 connection with¼" NPT -thread
● Temperature:	1 thermowell with G ¼" - thread (option)

Error limits

Maximum permissible error limits:

G10/16 : ±2.0%FS ; G25-G1000:±1.5%(20%Qmax≤Q≤Qmax) ; ±3.0(Qmin ≤ Q < 20%Qmax);

The Quantometers TBQS are all initially calibrated within the specified measurement errors. Reduced measurement errors limits are optionally available on request.

The Quantometers TBQS are manufactured with large measurement ranges due to the precision machining of the parts and a highly reproducible assembly process.

TBQS Quantometer

Performance data

DN [mm/inch]	G-Type	Qmin [m3/h]	Qmax [m3/h]	HF* [imp/m3]	NF [imp/m3]	Pressure loss [mbar] at Qmax and ρ=1 bar abs.		Error limit
						Air (ρ=1.2 kg/m3)	Natural gas (ρ=0.83 kg/m3)	
25/1”	10	2	16	140000	10	3	2	±2% FS
25/1”	16	2.5	25	140000	10	5	3	±2% FS
25/1”	25	4	40	140000	10	10	6	±1.5%(20%Qmax ≤Q≤Qmax, ±3(Qmin≤Q <20%Qmax)
40/1 1/2”	25	4	40	140000	10	8	5	
40/1 1/2”	40	6.5	65	140000	10	15	10	
50/2” a	40	5/6.5	65	104000	10	8	5	
50/2” a	65	10	100	104000	10	15	10	
50/2” b	40	5/6.5	65	104000	10	8	5	
50/2” b	65	10	100	104000	10	15	10	
65/2 1/2”	100	8	160	48400	1	7	4.5	
65/2 1/2”	160	12.5	250	48400	1	16	10	
80/3”	100	8	160	27000	1	6	3.5	
80/3”	160	12.5	250	27000	1	15	9	
80/3”	250	20	400	27000	1	25	16	
100/4”	160	12.5	250	13500	1	5	3	
100/4”	250	20	400	13500	1	12	8	
100/4”	400	32	650	13500	1	25	16	
150/6”	400	32	650	5400	1	6	3.5	
150/6”	650	50	1000	5400	1	15	10	
150/6”	1000	80	1600	5400	1	25	16	
200/8”	650	50	1000	2400	0.1	1	0.6	
200/8”	1000	80	1600	2400	0.1	3	2	
200/8”	1600	12.5	2500	2400	0.1	7	4.2	

* The absolute number of the pulses depends on the meter size and the actual meter itself. The stated values are of typical size. Exact values determined by calibration of the meter are located on the nameplate.

The Quantometer TBQS show very stable and reproducible measurement results. The measurement cartridge has been designed to be assembled into the pressure containing housing positioned by soft O-rings. This makes the TBQS meter very robust against any torsional and bending stresses resulting out of installation stresses. The meters can withstand far more than twice the specified torsional and bending stresses implied through the installation as defined for example in EN 12261.

The lifetime durability of the Quantometer TBQS is very stable due to the large dimensioned high precision ball bearings "made in Germany" along with the high precision machining of the body and all moving parts. All TBQS Quantometers are equipped with machined aluminum turbine wheels. After machining all aluminum parts, especially the turbine wheel, are hard anodized for less friction and higher resistance to

mechanical wear and tear or chemical influences.

In the case of contamination or dust in the measured gas it is recommended to install an optional oil lubrication pump for longer lifetime.

Meter design

The pressure containing housing (1) is very robust against torsional or bending forces due to the large cross sections. The aluminum turbine wheel (2) is machined out of full material on a 4 axis machine, dynamically precision balanced, and hard anodized. The computer optimized profile of the turbine blades in combination with the fluid dynamic optimized inlet flow straightener (5) provide for a very stable measurement characteris-tic also under elevated pressure operating conditions.

The high precision ball bearings "made in Germany" ensure minimal friction under all operating conditions. The complete measuring cartridge (6) is positioned in the housing by O-rings. This design feature also creates a circular room with absolute static opera-ting pressure for very precise pressure measurement without any dynamic flow influ-ences. The turning of the turbine wheel is transmitted via a low friction gear train (7) and a pressure stable and leak tight magnetic coupling (4) to the eight digit mechanical counter (3) with an environmental protection class of IP 67. The Quantometer TBQS can be installed horizontally and vertically up or down due to the 355° turnable index head.

The exchangeable low frequency (LF) switch in combination with an anti- tampering contact provides for the electrical connection to an electronic volume corrector and a possible further AMR device. The optional oil lubrication of the ball bearings is ensured through the lubrication pump. The complete design of the TBQS Quantometer has been aimed to be very robust in combination with highest measurement performance.

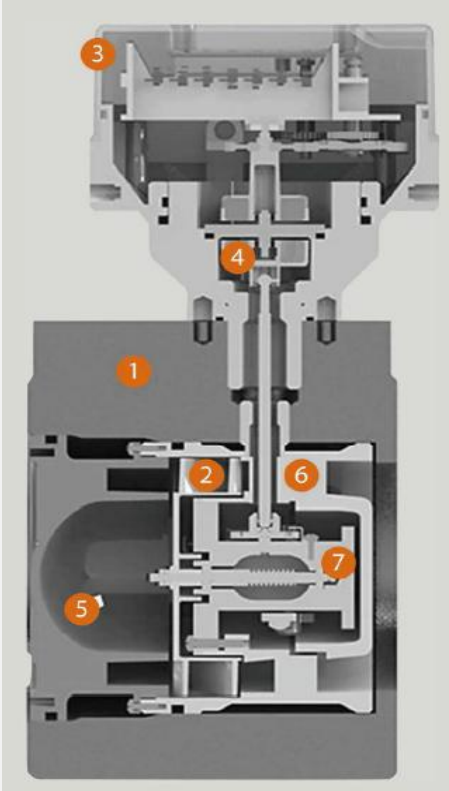

1. Pressure containing housing
2. Turbine wheel
3. Mechanical counter I index
4. Magnetic coupling
5. Inlet flow straightener
6. Measuring cartridge
7. Gear train

TBQS Quantometer

Dimensions, weights and connections

Housing dimensions [PN 16 / ANSI 150]									
DN [mm/inch]	L [mm]	A [mm]	B no pump [mm]	B with pump [mm]	C no pump [mm]	C with pump [mm]	H [mm]	Weight without pump [kg]	Weight with pump [kg]
25/1”flanged	150	65	55	165	120	230	195	5.4	6.1
25/1”threaded	150	65	55	165	120	230	195	5.4	6.1
25/1”threaded*	280	65	55	165	120	230	195	5.4	6.1
40/ 1 $^1/_2$ threaded	150	65	55	165	120	230	195	5.4	6.1
50/2” a	75	60	70	150	130/235	210/315	225	4.3	5.1
50/2” b	60	60	70	150	130/235	210/315	225	4.3	5.1
65/2$^1/_2$”	100	70	80	200	150/270	255/375	245	4.8	5.6
80/3”	120	80	90	210	170/270	290/390	260	6.7	7.4
100/4”	150	90	100	220	190/290	310/410	285	8.4	9.2
150/6”	180	120	120	240	240/360	360/460	335	13.0	13.8
200/8”	200	150	160	280	300/420	420/540	370	17.0	17.8

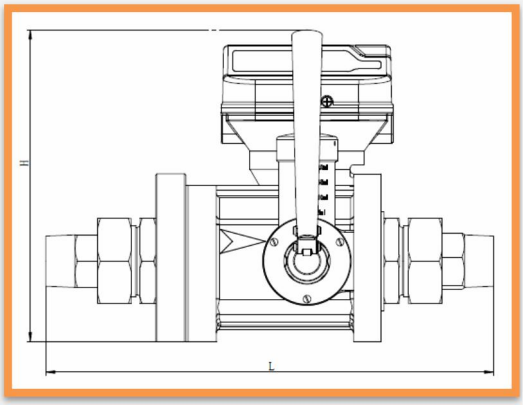

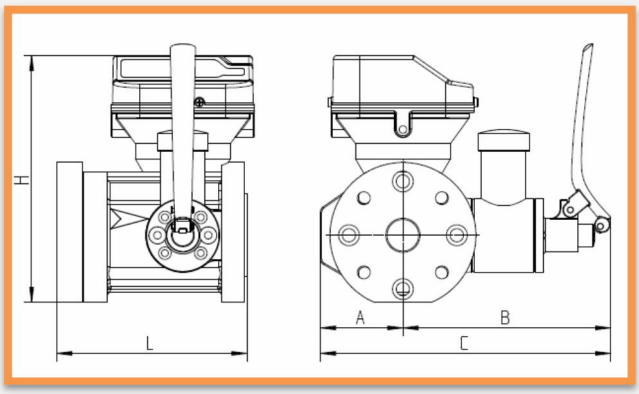

*25/1”threaded , L=280

The pressure loss of the TBQS Quantometer is minimized through a fluid dynamically optimized inlet diffuser, very low manufacturing tolerances and the high precision, low friction ball bearings. The optimized f low conditions allow a minimal straight inlet pipe of ≥ 3 DN. If the installation conditions allow or in case of severe flow perturbations acc. to OIML a straight inlet length of ≥ 5 DN is recommended."

Connections

DN [mm/inch]	EN 1092-1 PN 16	ANSI B 16.5 Class 150
25/1”Flanged	4xM12	4xM14
25/1”threaded	Rp1”	Rp1”
40/1$^1/_2$”threaded	Rp1$^1/_2$”	Rp1$^1/_2$”
50/2”	4xM16	4xM16
65/2$^1/_2$”	4xM16	4xM16
80/3”	4xM16	4xM16
100/4”	8xM16	8xM16
150/6”	8xM20	8xM20
200/8”	12xM22	8xM22

TBQS Quantometer housings are manufactured without flanges as a "sandwich" design to be installed between the two inlet and outlet pipe flanges on a standard basis with raised face (RF) flanges according to EN 1092-1 or ANSI B 16.5 for class 150 with a maximum operating pressure of 16 bar/ 2,0 M Pa. The TBQS DN 25 /1" is designed as flange version with threaded holes or as a threaded version with a thread of Rp 1" or other threads upon request. More technical details, especially for commissioning and operation, please refer to the operation manual of the TBQS turbine meter.

www.bellflowsystems.co.uk

BELL
Flow Systems